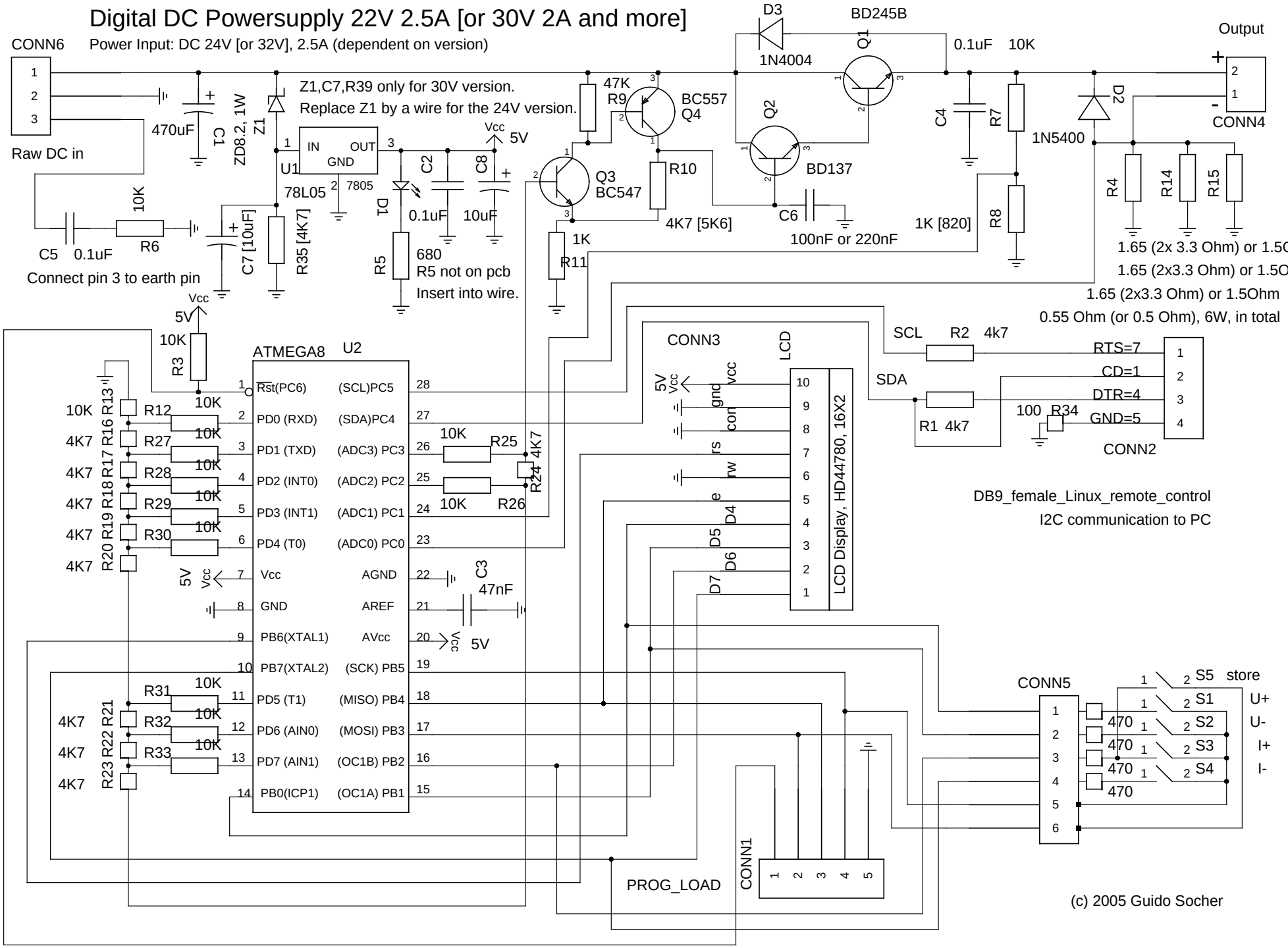Digital DC Powersupply 22V 2.5A [or 30V 2A and more]